LiGHT SKY

www.lightsky.com.cn

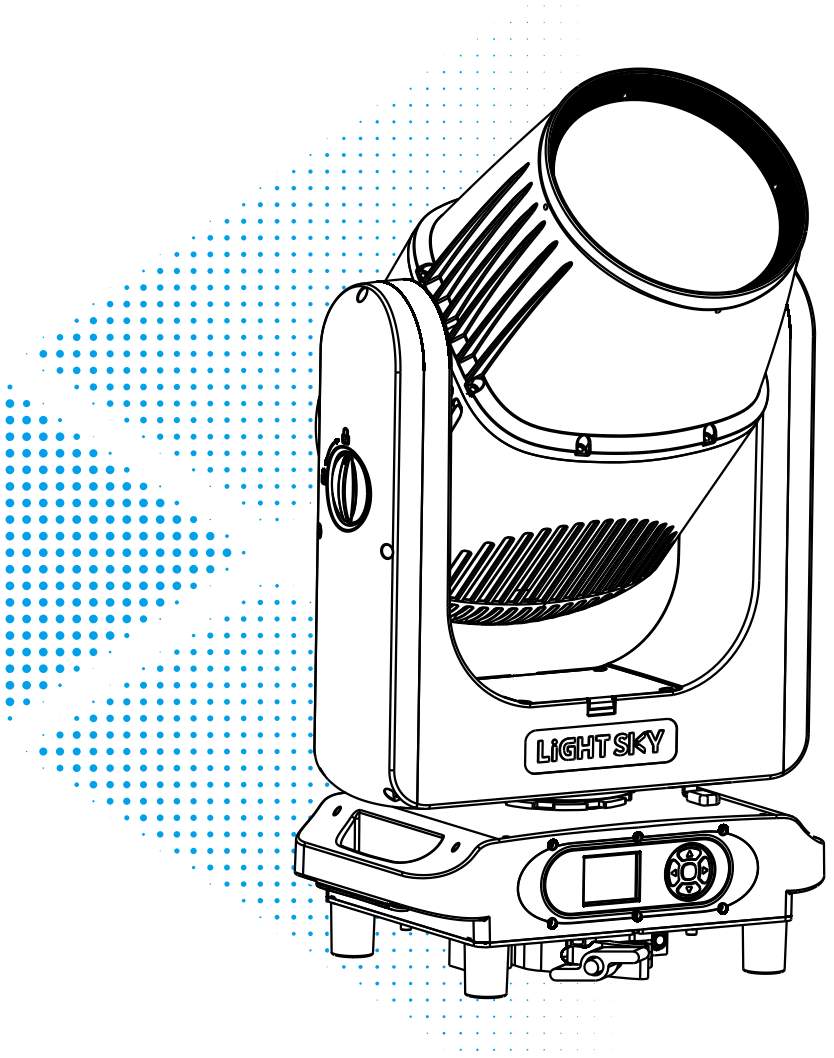

DOLPHIN SMART

User Manual

Please read the instruction carefully before use

Fly Dragon Lighting Equipment Co., Ltd.

Add : NO.4 JINGNENG ROAD 1, HUADU DISTRICT, GUANGZHOU, CHINA.
Tel : 020-61828288 Fax : 020-61828188 Postal Code : 510820
Email : flydragon@lightsky.com.cn

Social Media

LiGHT SKY Wechat

CONTENTS

1. Safety Instructions 2

2. Technical Specifications 5

2.1. Attachment And Size 7

3.Color/Gobo/Prism 10

4. Control Panel 11

5. Connection and control 12

5.1. Power supply connection 12

5.2. DMX 512 Connection 13

6. How To Set The Unit 14

6.1. Main Function 14

6.2. Address Setting 17

6.3. DMX 512 Configuration 22

7. Electrical Connection Diagram 22

8. Troubleshooting 23

9. Fixture Cleaning 25

10. Duty exonerative and copyright protectio 25

Congratulations on choosing our company product! We thank you for your custom.

- Please keep in mind that this product, like other products of the company, adheres to the concept of people-oriented design and manufacture, and takes product quality as the foundation.
- We put the interests of customers first, and do our best to meet customer requirements.
- Please read this instruction manual carefully and keep it for future reference. In the case of fully understanding the product information, strictly abide by theUse the instruction manual to ensure that the product is installed, used and serviced correctly and safely.
- Our company is not responsible for any damage to lamps or other performance due to personal failure to follow the instructions during installation, use and maintenance.responsibility.
- Our company reserves the right to modify the manual at any time and without prior notice.

1.Safety Instructions

WARNING

Please read the instruction carefully which includes important information about the installation, usage and maintenance.

Please keep this User Manual for future consultation. If you sell the unit to another user, be sure that they also receive this manual.

The following symbols are used to identify important safety information on the product and in this manual:



WARNING! Safety hazard. Risk of severe injury or death.



WARNING! Refer to manual betore installing, powering or servicing.



WARNING! Hazardous voltage. Risk of severe or lethal electric shock.



WARNING! Fire hazard.



WARNING! Burn hazard. Hot surface.not touch.Do not touch



WARNING! Risk of eye injury.Safety glasses must be worn.



WARNING! Risk of hand injury.Safety gloves must be worn.



WARNING! Avoid direct eye contact



DANGER! Applies only to luiminaires directly mounted on surfaces of non-combustible materials



DANGER! Do not discard Trash can



DANGER! Mark of ground



DANGER! Replace all shatter shields



DANGER! Take a short distance from the object to be photographed (meters)



DANGER! Rated maximum ambient temperature



DANGER! Do not point the lens towards the sun or strong light



DANGER! Operation not allowed during runtime

Important:

Damages caused by the disregard of this user manual are not subject to warranty. The dealer will not accept liability for any resulting defects or problems.

— Unpack and check carefully to ensure that there is no transportation damage before using the unit.

— Do install and operate by qualified operator.

— The light source in this luminaire should be replaced by the manufacturer or its service agent or a similarly qualified person, always cut off the power supply before replacing he light source.

— Do not allow children to operate the fixture.

— Use safety chain when fixing the unit. Handle the unit by carrying its base instead of head only.

— The unit must be installed in a location with adequate ventilation, at least 50cm from adjacent surfaces.

— Be sure that no ventilation slots is blocked, otherwise the unit will be overheated.

— Before operation, ensure that you are connecting this product to the proper voltage in accordance with the specifications in this manual or on the product's specification label.
— It's important to ground the yellow/green conductor to earth in order to avoid electric shock.
— Minimum ambient temperature Ta: -20°C. Maximum ambient temperature Ta: 45°C.
— Do not operate this product at a lower or higher temperature.
— Do not connect the device to any dimmer pack.
— When the lamp is running, do not place combustible objects next to it. The shortest distance between the device and inflammable and explosive objects or materials is 1 m.
— Make sure the power cord is not crimped or damaged; replace it immediately if damaged.
— Unit's surface temperature may reach up to ≤60°C. Do not touch the housing bare-handedduring its operation.
— Avoid any flammable liquids, water or metal from entering the unit. Once it happens, cut off the mains power immediately.
— Do not operate in a dirty or dusty environment. Do clean the fixture regularly.
— Do not touch any wire during operation as there might be a hazard of electric shock.
— Avoid entanglement of the power cord with other wires.
— The distance between the luminaire and the irradiated surface shall be greater than 3 meters.
— Do not shine light directly into another fixture's lens. Intense beam can damage internal components.
— Direct sunlight or any other strong light beam penetrating the front lens of the luminaire can cause severe internal damage. During unpacking, installation, operation, and xtended idle periods outdoors, it is prohibited to expose the front lens of the luminaire to beams of direct sunlight or any other strong light source from any angle.

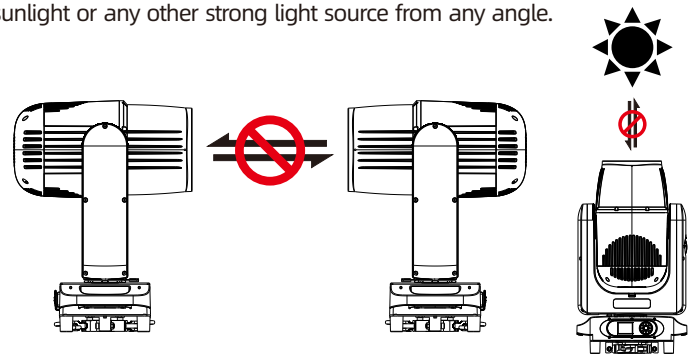

— In the event of serious operating problem, stop using the unit immediately.
— Never turn on and off the unit time after time.
— The housing, the lenses, or the ultraviolet filter must be replaced if they are visibly damaged.

— Do not open the housing as there are no user serviceable parts inside.
— Do not attempt to operate this unit if it becomes damaged. Do not attempt any repairs yourself. Repairs carried out by unskilled people can lead to damage or malfunction. Please contact the nearest authorized technical assistance center if needed.
— Disconnect this product from its power source before servicing.
— Do use the original packaging if the device is to be transported.
— Avoid direct eye exposure to the light source while the product is on.
— Do not operate this product if you see damage on the housing, shields, or cables. Have the damaged parts replaced by an authorized technician at once.

Installation:

The luminaire must be securely fastened to the quick-lock hook with screws to prevent vibration or slipping during operation. The supporting structure must be able to withstand 6 times the weight of the luminaire. Additionally, a safety cable must be installed that can endure 30 free-fall drops from 300mm without failure. Installation should only be performed by qualified professionals, and the luminaire must be mounted in an area inaccessible to unauthorized personnel or away from pedestrian traffic.

2.Technical Specifications

OPTICAL

- Light source: 300W white LED module
- Optical angle: 1.77°(ϕ6.5 standard Beam hole)/1.3°(ϕ 5 Beam hole)/0.8°(ϕ3mm Beam hole)/0.5°(ϕ 1.5mm Beam hole), can be flexibly switched.
- Optical lens: coated with high anti reflective film, ϕ174mm
- Color temperature: 7400K ± 250K
- Color rendering index: Ra≥70
- Illuminance: 60000 lx@10m
- Luminous flux： 3492lm
- LED source life expectancy: 50000 h(*LED source life depends on several factors, including but not limited to:environmental conditions, control dimming, power supply and voltage, switchingcycle, fixture mode, etc.)

COLOUR

- CMY infinite color mixing
- 14 color chips+white light, capable of achieving bidirectional color rainbow, dual color step gradient (linear movement), bidirectional rotation of color wheel, random color mode.

PATTERN

- Rotating fixed combination pattern disc: 7 fixed patterns+white circles+7 glass patterns (replaceable), can achieve rotation, flowing, and shaking effects.

EFFECT

- Prism: 24 prisms+8 prisms, capable of independent bidirectional rotation.
- Soft light effect: mild atomization.
- Electronic dimming: 0-100% linear dimming, uniform light spot.
- The electronic strobe speed is 0.5-25 times/second.
- LED refresh rate: 1000Hz~25KHz

CONTROL AND PROGRAMMING

- Control channel: 23CH, please refer to the channel table for details.
- Protocol: Standard DMX512 protocol, RDM protocol, sCAN protocol, Art-Net protocol .
- Data connection: Three core or five core signal input/output、RJ45
- Display: LCD screen

SOFTWARE
- Upgrade software through DMX signal.
- Intelligent temperature control ensures LED lifespan.
- Silent fan, three working modes(High Output /Standard /Silent).

X/Y AXIS MOTION ANGLE
- X-axis: 540 ° (8-bit/16bit precision scanning)
- Y-axis: infinite rotation
- Reset function with automatic error correction.
- Fixed lock: horizontal/vertical lock.

POWER SUPPLY AND POWER
- Input voltage: AC 100-240V 50/60Hz
- Maximum power: 562W
- Power factor: 0.99
- Maximum current of the lamp: 2.55A/220V, 5.62A/100V

DIMENSION
- Product size: 353 × 232 × 621mm
- N.W.: 22.0 kg
- Carton packaging (default): 425 × 305 × 750mm
- G.W.: 26.1 kg

OTHER
- Protection level: IP66
- Work environment:- 20℃ ~ 45℃
- Maximum surface temperature of lamp body: ≤ 60 ℃
- Hook: Suitable for pipes with a diameter of 38-52 mm

OPTIONAL ACCESSORIES / PACKAGING
- Flycase Size(2 units): 650 × 440 × 830mm
- G.W.: 77.4 KG

APPROVALS
- The product implementation standard: IEC 60598-1、IEC 60598-2-17
- Approved certifications: CE、RoHs
- The product complies with the following EU directives:
- Low Voltage Directive 2014/35/EU . EMC Directive 2014/30/EU

illumination diagram

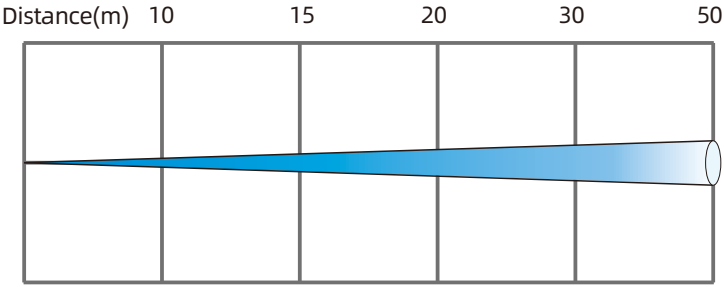

1.77° Lux	60000	26667	15000	6667	2400
diameter(m)	0.31	0.47	0.62	0.93	1.55

2.1.Attachment And Size

Attachment contents-Fig.1

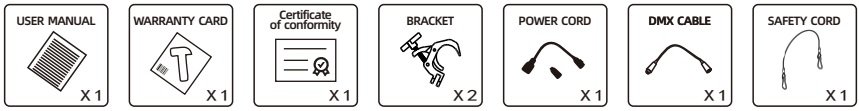

Size-Fig.2(Unit:mm)

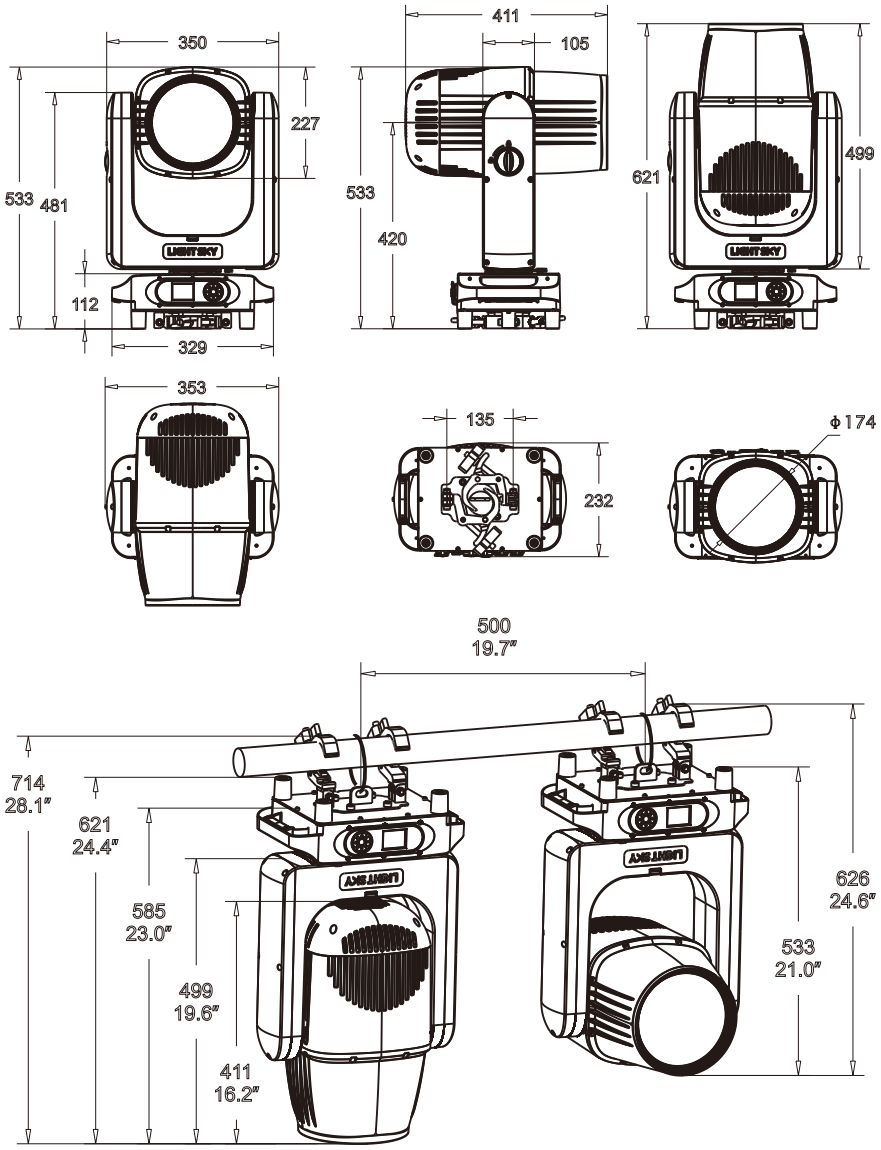

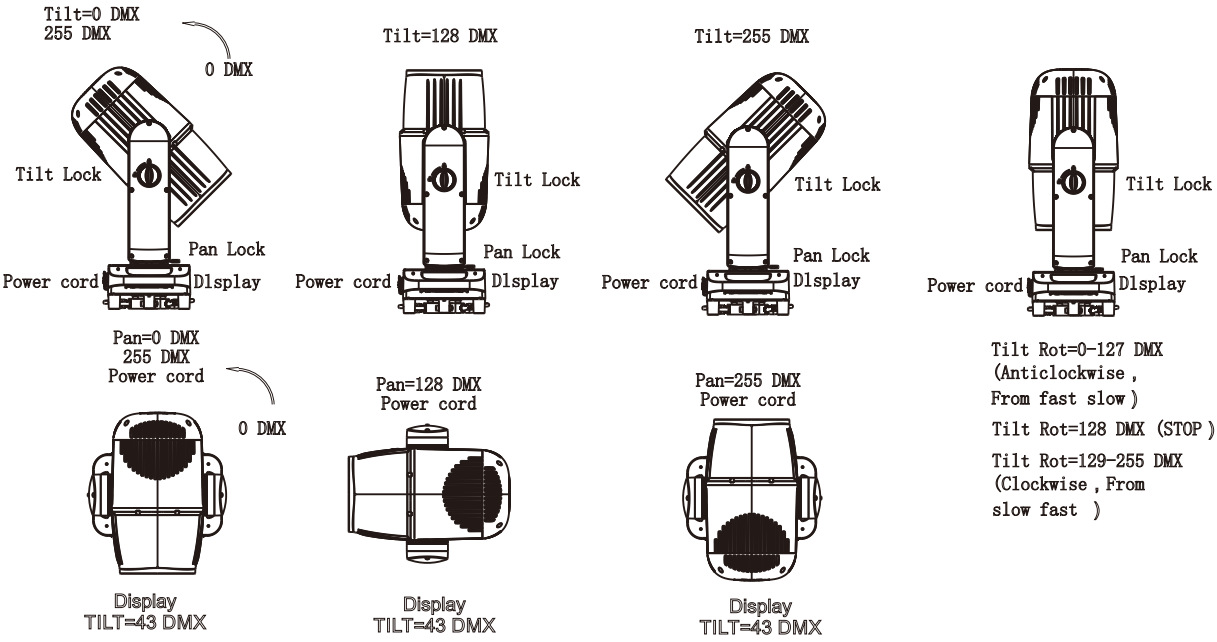
Tilt=0 DMX
255 DMX
0 DMX
Tilt Lock
Pan Lock
Power cord
Dlsplay
Tilt=128 DMX
Tilt Lock
Pan Lock
Power cord
Dlsplay
Tilt=255 DMX
Tilt Lock
Pan Lock
Power cord
Dlsplay
Tilt Lock
Pan Lock
Power cord
Dlsplay
Pan=0 DMX
255 DMX
Power cord
0 DMX
Display
TILT=43 DMX
Pan=128 DMX
Power cord
Display
TILT=43 DMX
Pan=255 DMX
Power cord
Display
TILT=43 DMX
Tilt Rot=0-127 DMX
(Anticlockwise ,
From fast slow)
Tilt Rot=128 DMX (STOP)
Tilt Rot=129-255 DMX
(Clockwise , From
slow fast)

3.Color/Gobo/Prism

CMY-color wheel



CMY



Color

Pattern

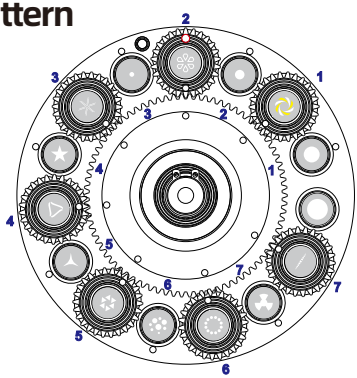

White

Glass pattern



Metal pattern

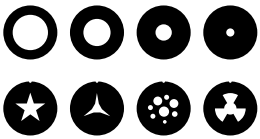

Precautions for replacing glass pattern:

1. Black background glass pattern pieces are divided into silver surface and black surface, with the silver surface being the coated surface;
2. When replacing the glass pattern piece, the silver coated surface must be installed facing the direction of the light source (i.e. consistent with the direction of the silver surface of the original pattern piece);
3. When replacing patterned gears, do not replace patterned gears with magnetic beads at will;
4. During installation, it is necessary to strictly follow the order of the pictures and do not arbitrarily change the original order of the pattern pieces.

Prism

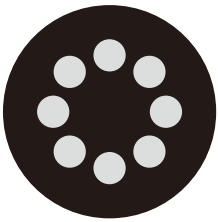

8Prism

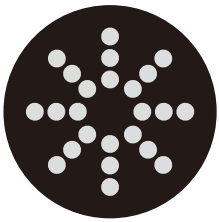

24Prism

4.Control Panel

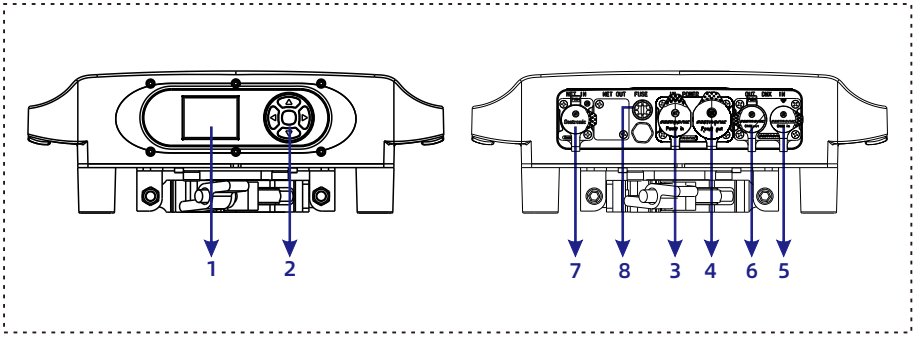

1.Display: To show the various menus and the selected function.

2.Button:

●	OK confirmation key
▲	UP
▼	DOWN
◀	To the left
▶	To the right

3.Power input: Connect the power supply.

4.Power output: Connect the lamp power output adapter.

5.DMX input: Used for DMX512 connection, use 3 core or 5 core XLR signal cable toconnect console and lamps,And input DMX signal.

6.DMX output: Used for DMX512 connection, use 3 core or 5 core XLR signal cable toconnect console and lamps,And output DMX signal.

7.Art-net/USB: The information of the lamp can be transmitted to the main controllerthrough the network cable, and the lamp can be controlled through RJ45(optional). USB optional.

8.Fuse holder: Used for the bottom box battery pack power supply display board when not powered on.(Note: In the case of air transportation, the lighting fixtures will require disassembly of fuses for shipment, and they must be installed by themselves upon receipt.)

5.Connection and control

5.1.Power supply connection

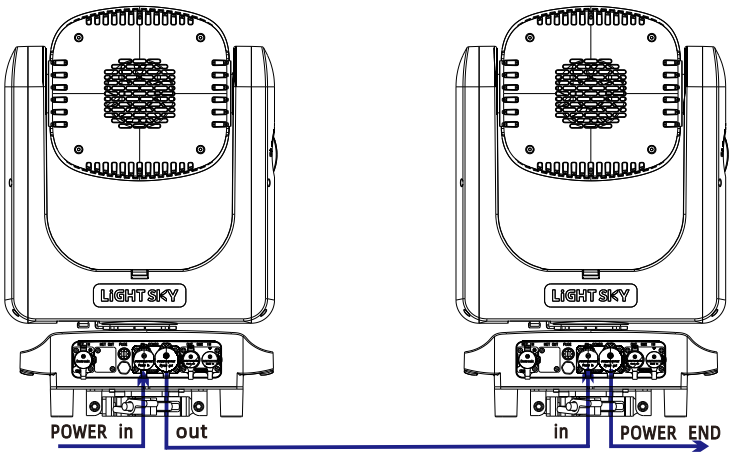

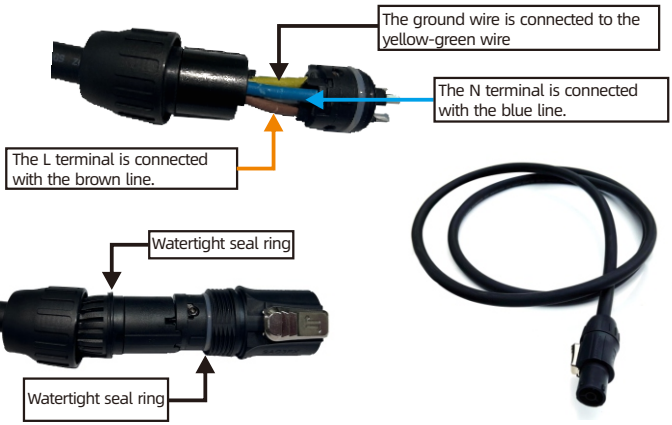

- The bus connecting the power supply must be installed by a qualified professional technician.
- After completing all the above operations and ensuring that it is installed, you can power on the lamp to operate.

5.2.DMX 512 Connection

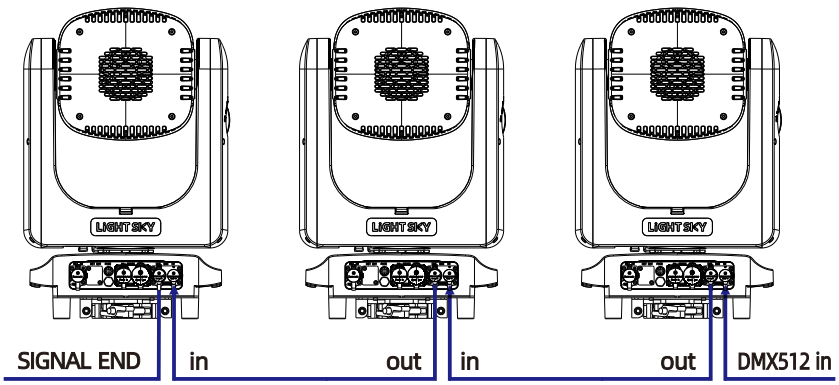

DMX-input

1- Shield
2- Signal (-)
3- Signal (+)
4- Not connected
5- Not connected

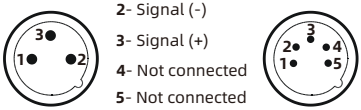

DMX - output

1- Shield
2- Signal (-)
3- Signal (+)
4- Not connected
5- Not connected

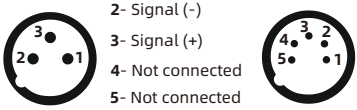

1. At last unit, the DMX cable has to be terminated with a terminator. Solder a 120 Ω 1/4W resistor between pin 2(DMX-) and pin 3(DMX+) into a 3-pin XLR-plug and plug it in the DMX-output of the last unit.
2. Connect the unit together in a "daisy chain" by XLR plug cable from the output of the unit to the input of the next unit. The cable cannot be branched or split to a "Y" cable. DMX 512 is a very high-speed signal. Inadequate or damaged cables, soldered joints or corroded connectors can easily distort the signal and shut down the system.
3. The DMX output and input connectors are pass-through to maintain the DMX circuit, when one of the units' power is disconnected.
4. Each lighting unit needs to have a DMX address to receive the data by the controller. The address number is between 1-512.
5. The end of the DMX 512 system should be terminated to reduce signal errors.
6. 3 pin XLR connectors are more popular than 5 pins XLR.
   3 pin XLR: Pin 1: GND, Pin 2: Negative signal (-), Pin 3: Positive signal (+)
   5 pin XLR: Pin 1: GND, Pin 2: Negative signal (-), Pin 3: Positive signal (+), Pin4, Pin5 not used.

6.How To Set The Unit

6.1.Main Function

Main menu	I menu	II menu	III menu	Note
DMX Address	Address	1-512		
	Channel	23CH		
	State	Black(Default)		
		Hold		
	InputMode	DMX(Default)		This menu can only be displayed when the artnet module is connected.
		ARTNET		
	DmxAddressLock	OFF		
		ON(Default)		
Information	Time	Total Power Time		
		Power Time		
		Total Light Time		
		Light time		
	Temperature	LED Temp		
		PCB Temp		
	Fan Info.	BaseFanVol		
		ArmFanVol		
		OuterFanVol		
		FocusFanVol		
		BaseFan1Sp		
		ArmFanSp		
		OuterFanSp		
		GoboFanSp		
		FocusFanSp		
	Fixture state	1.MCU(XY) ***		
		2.MCU(LED) ***		
		3.MCU(CMY) ***		
		4.MCU(Focus) ***		
		5.Pan ***		
		6.Tilt ***		
		7.Cyan ***		
		8.Megenta ***		
		9.Yellow ***		
		10.Color ***		
		11.Gobo ***		
		12.GoboRot ***		
		13.Focus ***		
		14.BaseFan ***		
		15.ArmFan ***		
		16.OuterFan ***		
		17.GoboFan ***		
		18.FocusFan ***		
	RDM UID	3888: xxxxxxxx		
	DMX Live	1.Pan ***		
		2.PanFine ***		
		3.Tilt ***		
		4.TiltFine ***		
		5.TiltRot ***		
		6.Function ***		
		7.Cyan ***		
		8.Magenta ***		
		9.Yellow ***		
		10.Color ***		
		11.Fixgobo ***		
		12.Rotgobo ***		
		13.Rot ***		
		14.Prism1 ***		

Main menu	I menu	II menu	III menu	Note
		15.Prism1Rot ***		
		16.Prism2 ***		
		17.Prism2Rot ***		
		18.Frost ***		
		19.Focus ***		
		20.FocusFine ***		
		21.Dimmer ***		
		22.DimmerFine ***		
		23.Strobe ***		
	Software	1.Display Ver. Vxxx		
		2.XY Ver. Vxxx		
		3.LED Ver. Vxxx		
		4.CMY Ver. Vxxx		
		5.Focus Ver. Vxxx		
Personal	PanTilt Setting	Pan Invert	OFF / ON	
		Tilt Invert	OFF / ON	
		P/T Rectify	OFF / ON	
	Display Setting	Language	EN /ZH	
		Disp. Backlight	OFF(Default) / ON	
		Disp. Direction	Forward(Default) Reverse	
		Dis.Blink	OFF / ON	
	Dimmer&Fan Setting	Led Hz	1800Hz	
			3600Hz	
			7200Hz(Default)	
			25000Hz	
		Dimmer Curve	Linear	
			Square(Default)	
			I-Square	
			Scurve	
		Dimmer Speed	Snqp(Default)	
			Fade	
		Fan Mode	HighOutput	
			Standard(Default)	
			Silent	
	Artnet Setting	IP Address	***.***.***.***	This menu can only be displayed when the artnet module is connected.
		Mask Address	***.***.***.***	
		Universe Address	0-32767	
		sACN Universe Address	1-63999	
		DHCP	OFF(Default)	
			ON	
		Ethernet To DMX	OFF (Default)	
			ON	
Manual Control	Channel control	1.Pan *** ...		
		2.PanFine *** ...		
		3.Tilt *** ...		
		4.TiltFine *** ...		
		5.TiltRot *** ...		
		6.Function *** ...		
		7.Cyan *** ...		
		8.Magenta *** ...		
		9.Yellow *** ...		
		10.Color *** ...		
		11.Fixgobo *** ...		
		12.Rotgobo *** ...		
		13.Rot *** ...		
		14.Prism1 *** ...		
		15.Prism1Rot *** ...		
		16.Prism2 *** ...		

Main menu	I menu	II menu	III menu	Note
		17.Prism2Rot *** ...		
		18.Frost *** ...		
		19.Focus *** ...		
		20.FocusFine *** ...		
		21.Dimmer *** ...		
		22.DimmerFine *** ...		
		23.Strobe *** ...		
	Reset	PanTilt		
		Head Module		
		All		
Service	Calibration	1.Pan *** ...		
		2.Tilt *** ...		
		3.Cyan *** ...		
		4.Magenta *** ...		
		5.Yellow *** ...		
		6.Color *** ...		
		7.Fixgobo *** ...		
		8.Rotgobo *** ...		
		9.Rot *** ...		
		10.Prism1 *** ...		
		11.Prism1Rot *** ...		
		12.Prism2 *** ...		
		13.Prism2Rot *** ...		
		14.Frost *** ...		
		15.Focus *** ...		
		16.Dimmer ***		
	Factory Reset	NO/ YES		
	Reset Timers	1.Total Power Time	NO / YES	
		2.Total Light Time	NO / YES	
		1.Power Time	NO / YES	
		2.Light Time	NO / YES	
	Developer	1.Logo Set		
		2.Up Logo		
		3.Language		
		4.Fixture Type		
	Firmware update			
Language				
Test	Test PanTilt			
	Test Head Module			
	Test All			
Rotate Display				

6.2.Address Setting

Enter MENU, select the DMA setting function, select the address code setting, press the OK button to confirm, and the current DMA address will be displayed in the On screen display. Use the up/down buttons to select addresses 001-512, press the OK button to save the current address code, and return to the previous menu level.

Please refer to the following diagram to address your DMX512 channel for the first 4 units.

Channel mode	Unit **1** Address	Unit **2** Address	Unit **3** Address	Unit **4** Address
23 CH	1	24	47	70

6.3.DMX 512 Configuration

Please control the fixture by referring to the configurations below

23 Channel	DMX	Function	Note
1	0--255	Pan positioning	
2	0--255	Fine Pan positioning	
3	0--255	Tilt positioning	
4	0--255	Fine Tilt positioning	
5		Tilt Rotation	
	0	Stop	
	1-127	Forwards tilt rotation fast to slow	
	128	Stop	
	129-255	Backwards tilt rotation slow to fast	
6		DeviceSet(Hold 3s)	
	0-25	No function	
	26-30	Reset Head	
	31-35	Reset Pan&Tilt	
	36-40	Reset All	
	41-49	No function	
	50-59	Fan HighOutput mode	
	60-69	Fan Standard mode	
	70-79	Fan Silent mode	
	80-84	Dis.Blink off	
	85-89	Dis.Blink on	
	90-129	No function	
	130-139	Pan invert on	
	140-149	Pan invert off	
	150-159	Tilt invert on	
	160-169	Tilt invert off	
	170-177	LED frequency 1.8kHz	
	178-185	LED frequency 3.6kHz	
	186-193	LED frequency 7.2kHz	
	194-199	LED frequency 25kHz	
	200-204	Dimmer curve linear	
	205-209	Dimmer curve square	
	210-214	Dimmer curve inv-square	
	215-219	Dimmer curve “S”	
	220-229	Dimmer fast	
	230-239	Dimmer smooth	
	240-255	No function	
7	0-255	Cyan	
8	0-255	Magenta	
9	0-255	Yellow	
		ColorWheel1	
	0-4	White	
	5-8	White+Red	

23 Channel	DMX	Function	Note
10	9-12	Red	
	13-17	Red+Orange	
	18-21	Orange	
	22-25	Orange+Aquamarine	
	26-29	Aquamarine	
	30-34	Aquamarine+Green	
	35-38	Green	
	39-42	Green+Light Green	
	43-46	Light Green	
	47-51	Light Green+Lavender	
	52-55	Lavender	
	56-59	Lavender+Pink	
	60-63	Pink	
	64-68	Pink+Yellow	
	69-72	Yellow	
	73-76	Yellow+Rose red	
	77-80	Rose red	
	81-85	Rose red+Blue	
	86-89	Blue	
	90-93	Blue+CTO 260	
	94-98	CTO 260	
	99-102	CTO 260+CTO 190	
	103-106	CTO 190	
	107-110	CTO 190+CTB 8000	
	111-115	CTB 8000	
	116-119	CTB 8000+Blue	
	120-123	Blue	
	124-127	Blue+White	
	128-190	Forwards ColorWheel rotation fast to slow	
	191-192	Stop	
	193-255	Backwards ColorWheel rotation slow to fast	
11		FixgoboWheel	
	0-9	Open	
	10-19	FixGobo 1(Open)	
	20-29	FixGobo 2	
	30-39	FixGobo 3	
	40-49	FixGobo 4	
	50-59	FixGobo 5	
	60-69	FixGobo 6	
	70-79	FixGobo 7	
	80-87	FixGobo1shake,slow to fast	
	88-95	FixGobo2shake,slow to fast	

23 Channel	DMX	Function	Note
	96-103	FixGobo3 shake,slow to fast	
	104-111	FixGobo4 shake,slow to fast	
	112-119	FixGobo5 shake,slow to fast	
	120-127	FixGobo6 shake,slow to fast	
	128-135	FixGobo7 shake,slow to fast	
	136-194	Forwards FixGoboWheel rotation fast to slow	
	195-196	Stop	
	197-255	Backwards FixGoboWheel rotation slow to fast	
		RotgoboWheel	
	0-9	Open	
	10-19	RotGobo 1(Open)	
	20-29	RotGobo 2	
	30-39	RotGobo 3	
	40-49	RotGobo 4	
	50-59	RotGobo 5	
	60-69	RotGobo 6	
	70-79	RotGobo 7	
12	80-87	RotGobo1 shake,slow to fast	
	88-95	RotGobo2 shake,slow to fast	
	96-103	RotGobo3 shake,slow to fast	
	104-111	RotGobo4 shake,slow to fast	
	112-119	RotGobo5 shake,slow to fast	
	120-127	RotGobo6 shake,slow to fast	
	128-135	RotGobo7 shake,slow to fast	
	136-194	Forwards RotGoboWheel rotation fast to slow	
	195-196	Stop	
	197-255	Backwards RotGoboWheel rotation slow to fast	
		RotgoboWheelRot	
	0-127	GoboRot indexing 0°- 360°	
13	128-189	Forwards RotGobo rotation fast to slow	
	190-193	Stop	
	194-255	Backwards RotGobo rotation slow to fast	
		Prism1	
14	0-127	Prism out	
	128-255	Prism In	
		Prism1Rot	
	0-127	Prism indexing	
15	128-190	Forwards prism rotation from fast to slow	
	191-192	Stop	
	193-255	Backwards prism rotation from slow to fast	
		Prism2	
16	0-127	Prism out	

23 Channel	DMX	Function	Note
	128-255	Prism In	
17		Prism2Rot	
	0-127	Prism indexing	
	128-190	Forwards prism rotation from fast to slow	
	191-192	Stop	
	193-255	Backwards prism rotation from slow to fast	
18		Frost	
	0-127	Frost Out	
	128-255	Frost In	
19	0-255	Focus 8bit	
20	0-255	FocusFine 16bit	
21	0-255	Dimmer	
22	0-255	Dimmer Fine	
23		Strobe	
	0-9	Strobe closed	
	10-49	Slow closing , Fast opening, slow → fast	
	50-89	Fast closing , Slow opening, Slow → Fast	
	90-119	Slow closing , Slow open, Slow → Fast	
	120-179	Random strobe,Slow → Fast	
	180-249	Synchronous strobe,slow → fast	
	250-255	Strobe open	

7.Electrical Connection Diagram

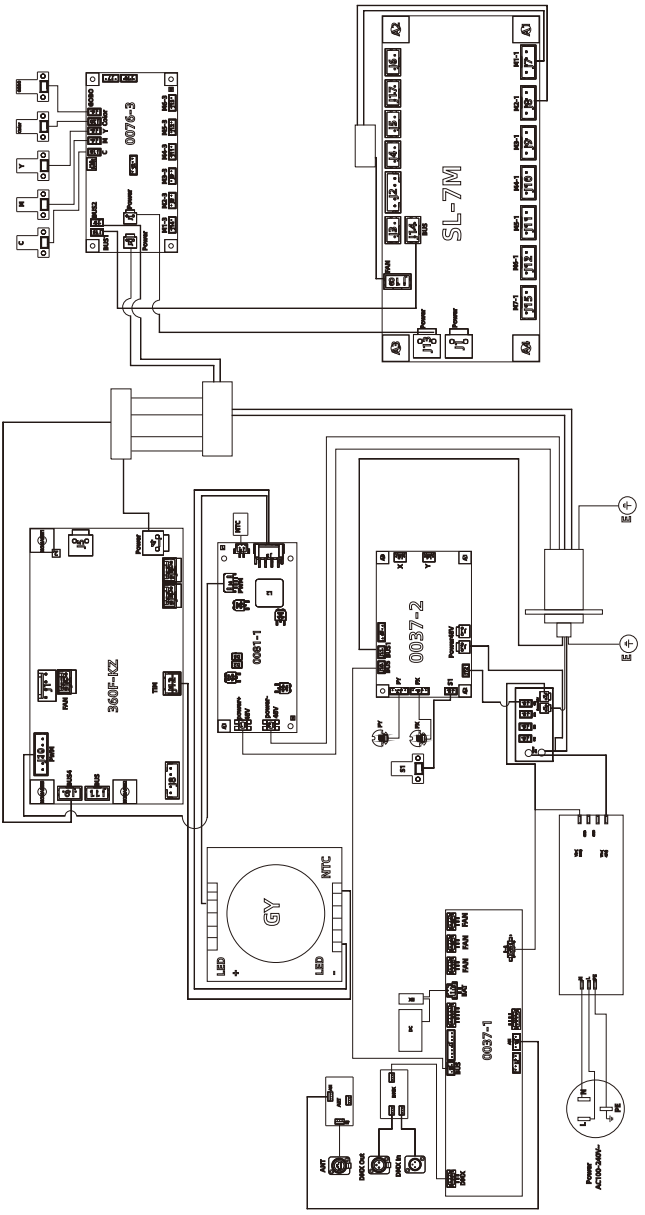

8.Troubleshooting

The following are common faults of lamps and corresponding solutions. Faults that cannot be repaired by yourself should be handled by professionally qualified personnel. Disconnect the power supply to the lamp during maintenance!

● The light source is not bright
- Check that a suitable light source is installed for the luminaire.
- Check whether the power supply connection of the lamp or the control switch is in poor contact.
- Check whether the light source has reached the end of its service life or is damaged, and replace it with a high-quality light source of the same specification.
- Measure whether the power supply is insufficient.
- Check whether the light source has not cooled down completely due to abnormal operation. Let the lamp cool down for more than 15 minutes to allow the light source to cool down. After returning to the normal start-up range, turn the power on again and it can be used normally.
- Check whether the DMX512 controller sends a command to turn on the light source.
- Check whether the light source and trigger circuit are disconnected or defective.
- Check whether the wiring terminals on the internal trigger are in poor contact and tighten the plug.
- Check the "Fan Speed and Voltage" in the "Basic Information" menu to see if the speed of FAN1/FAN2/FAN3 is above 500RPN. If it is below 500RPM, the light source will not light up. Replace the fan with the same specification.
- Check whether the over-temperature protection temperature switch inside the lamp is damaged. Go to the menu "Basic Information" and select "Equipment Temperature" to check - whether the temperature measuring plate shows that the temperature is too high or there is no temperature display.

● The beam appears dim and uneven
- The light source may have reached the end of its service life and does not emit enough light. Replace it with a light source of the same specification.
- Check whether there is dust accumulated in the optical part and clean it.
- Measure whether the power supply is insufficient.
- Finely adjust the screw device used to change the height of the lamp until the ideal light is achieved. Enter the menu "Service Options" and select "Calibration" to enter color and pattern adjustment, which can be adjusted to the center.

● The projected image is blurry
- Check whether the DMX512 controller channel value corresponding to the electronic focus system is suitable for the current projection distance.
- Check whether the mechanical part of the focusing system is stuck, remove the dust and add antifreeze and temperature-resistant lubricating oil.

● The light source of the lamp works intermittently
- Check whether the fan is running normally or is blocked by dust and paper debris.
- Check whether the inlet and outlet cooling air vents are blocked by dust.
- Check whether the lamp has reached the end of its service life.

- Check whether the power supply is insufficient, and whether the power switch and wiring are in poor contact or aging.
- Check whether the over-temperature protection temperature switch inside the lamp is damaged.

● Although it emits light, the lamp does not accept instructions from the controller

- Check whether the digital start address value and function options of the lamp are correct.
- Check whether the connection of the communication control line is correct. The communication line is too long or has been interrupted.
- Check whether the control equipment fails and whether the signal amplifier connected in series fails.
- Check whether the communication line is too long or if other devices interfere with each other.
- Optimize wiring, shorten the length of control signal lines, and route high-voltage and low-voltage lines separately
- Add signal amplifier isolator.
- The signal line is made of high-quality shielded twisted pair (impedance characteristic is 75Ω), and the signal terminal resistor is connected at the end of the lamp.
- Check that the circuit board communication IC or CPU is burned out because the bulb performs an abnormal operation when it is not completely cooled, causing the instantaneous ultra-high voltage leakage generated by the trigger, and replace the PCB board.

● The lamp cannot be started

- Check whether the power supply parameters match the lamps.
- Check whether the fuse at the light fixture's power input is blown.
- Check that the lamp has poor contact or falls off due to extrusion deformation, vibration of internal parts, moisture, etc. during long-distance transportation.
- Check whether the internal wires and connectors of the lamp are desoldered or loose.
- Check whether the electrical components of the lamp (such as power switch, transformer, ballast, capacitor, varistor, filter, power supply PCB board, motor control PCB board, etc.) are loose, short-circuited, burned out, etc.

● Some functions of the lamp cannot accept controller instructions

- Check whether the control device sends correct action instructions for these functions.
- Check whether the mechanical parts corresponding to these functions are loose or deformed.
- Check whether the motor sockets corresponding to these functions are loose or the corresponding driver chips are burned out.
- Check whether the motor wires corresponding to these functions are broken at the corners.
- Check whether the motors corresponding to these functions are damaged.

● During operation, the x or Y direction of the lamp does not move normally

- Click the previous step to check one by one.
- Check whether the corresponding drive belts in the X and Y directions of the lamp are detached or broken.
- Check whether the data feedback receiver corresponding to the X and Y directions in the lamp is damaged.
- Restart the computer and reset it once.

9.Fixture Cleaning

It is absolutely essential that the fixture is kept clean to ensure the maximum light-output and allow the fixture to function reliably throughout its life. The fixture must be cleaned regularly to avoid dust, dirt and smoke-fluid residues building up on or within the fixture. The cleaning frequency depends on the application environment. Clean the fixture immediately if the dust enters it to avoid damage to the optical lens due to excessive dust.

- A soft lint-free cloth moistened with any good glass cleaning fluid is recommended, under no circumstances should solvents be used.
- Always dry the parts carefully.
- Clean the external optical lens at least every 20 days .



CAUTION ! ! !

Disconnect from mains before starting maintenance operation.

10.Duty exonerative and copyright protectio

- Light source belongs to consumption products, not within the scope of warranty.
- The manufacturer shall not bear any responsibility for any damage caused by failure to operate in accordance with this instruction.
- The manufacturer reserves the right of final interpretation for all information in this manual. For any questions, please refer to the official website.
- All the information in this manual shall not be copied without permission.
- The data contained in this statement are subject to change in the future without prior notice.